VYPER

The call of the times and the product of technology

Auto-leveling 3D printer

ANYCUBIC
VYPER

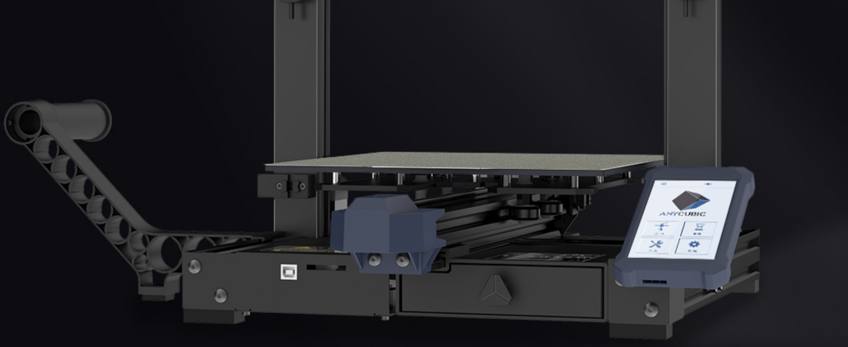

Cortex -M3
Architecture

Auto
Leveling

Stepper
Drivers

Z-axis Gap
Elimination Module

PEI Spring Steel
Magnetic Platform

Double-gear
Extrusion System

Fast
Assembly

Double Fan Two-way
Heat Dissipation

4.3 inch Large-size
Touch Screen

A brand-new Core

Equipped with a new 32-bit motherboard and a high-performance Cortex -M3 architecture main control chip, Vyper features faster computing speed and smoother system. The integration of TMC2209 silent driver makes the motherboard have both silent printing and precise voltage output control, which ensures a more accurate and silent printing.

• • •

Cortex -M3 Architecture

High-speed Computing

Silent Printing

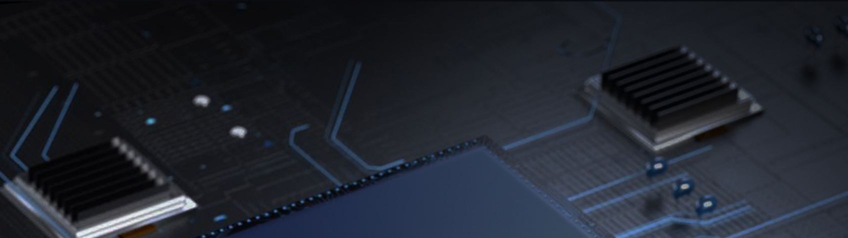

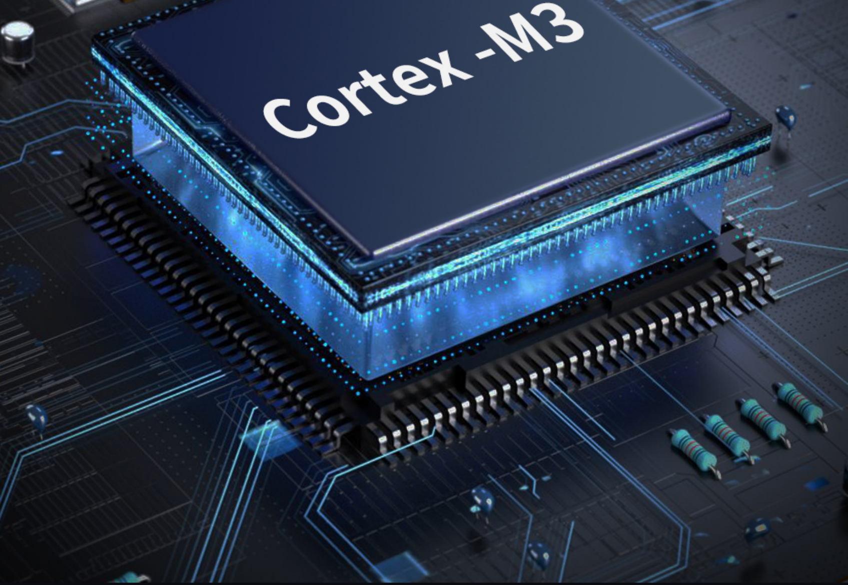

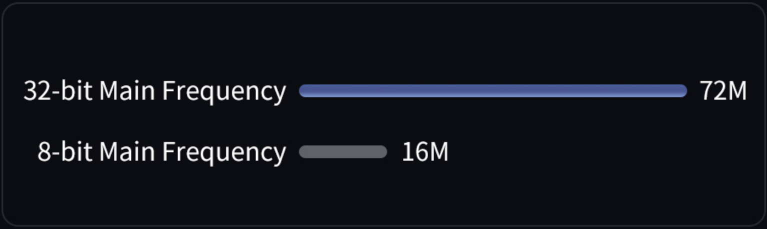

Auto Leveling

Vyper does not need manual leveling, the intelligent leveling system can automatically adjust the uneven hotbed, thus realizing one-touch leveling and printing.

• • •

Auto Leveling

16-point Precise Leveling

Z-axis High-precision Double Screw

The machine’ s double screw runs synchronously, thus bringing more stable operation and smaller zeroing error.

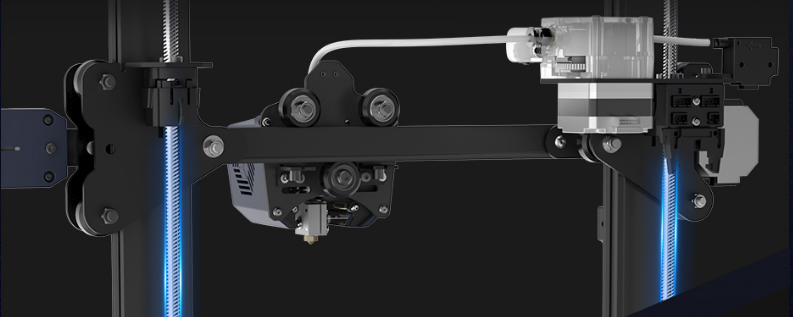

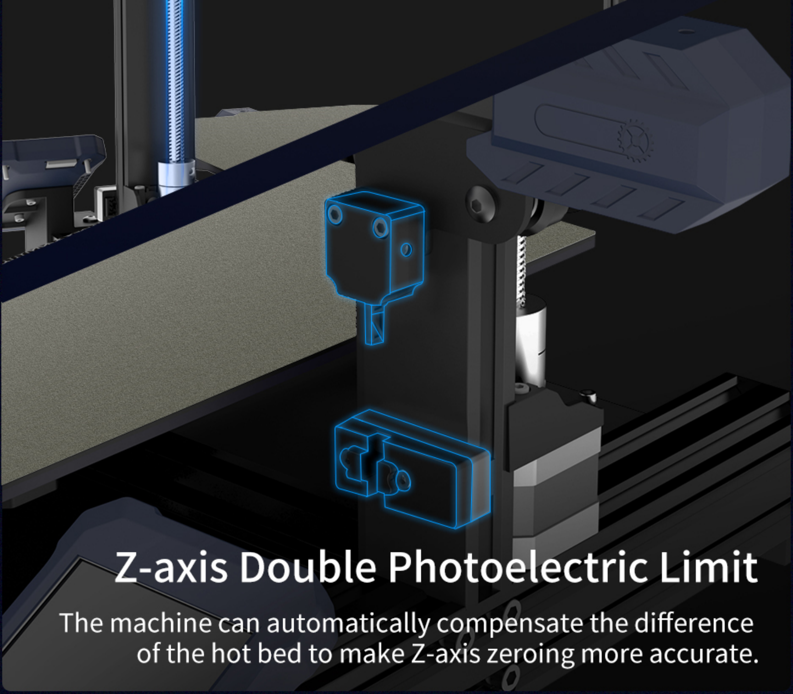

Z-axis Double Photoelectric Limit

The machine can automatically compensate the difference of the hot bed to make Z-axis zeroing more accurate.

Patented Z-axis Gap Elimination Module

The machine’ s Z-axis moves more smoothly,
which can avoid print layer marks and ensure printing precision.

• • •

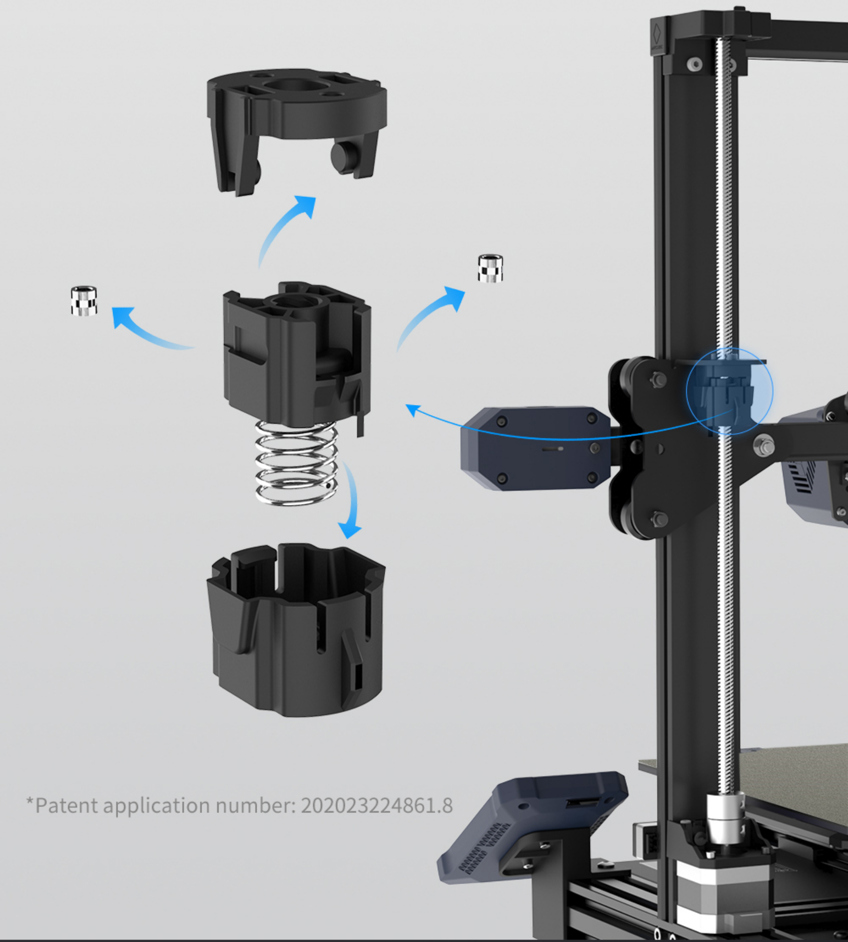

*Patent application number: 202023224861.8

Spring Steel Magnetic Platform

The platform adopts a new technique of special coating combined with spring steel, which features non-deformation at high temperature, scratch-resistant coating and easy model removal by bending or popping. It is compatible with a wide range of filaments, such as PLA, ABS, PETG, TPU, etc.

• • •

High Toughness

Scratch-resistant Coating

Easy Model Removal

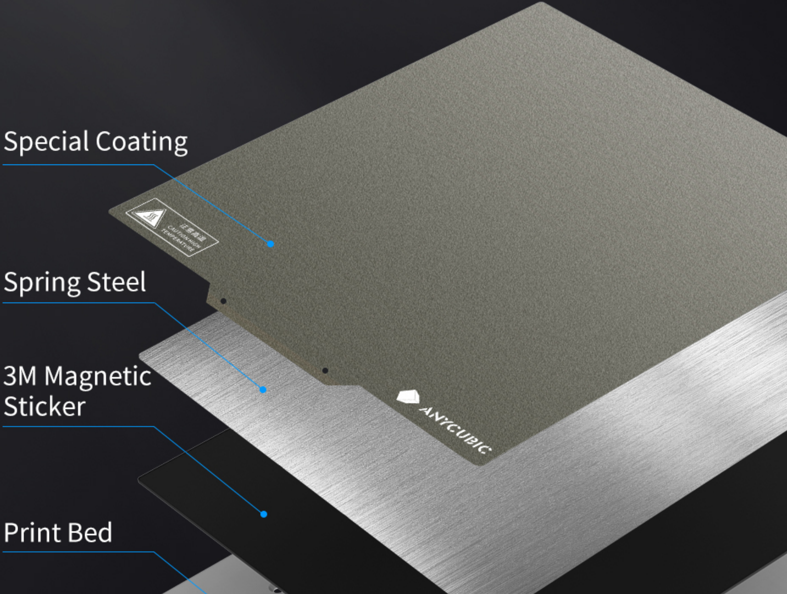

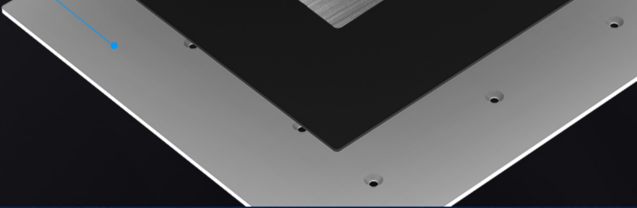

Double Fan Two-way Heat Dissipation

The printing head adopts a double fan two-way heat dissipation system, helping to cool down models rapidly. Compared with ordinary 3D printers, the printing quality is the same while the printing speed is faster, which can reach 100mm/s.

• • •

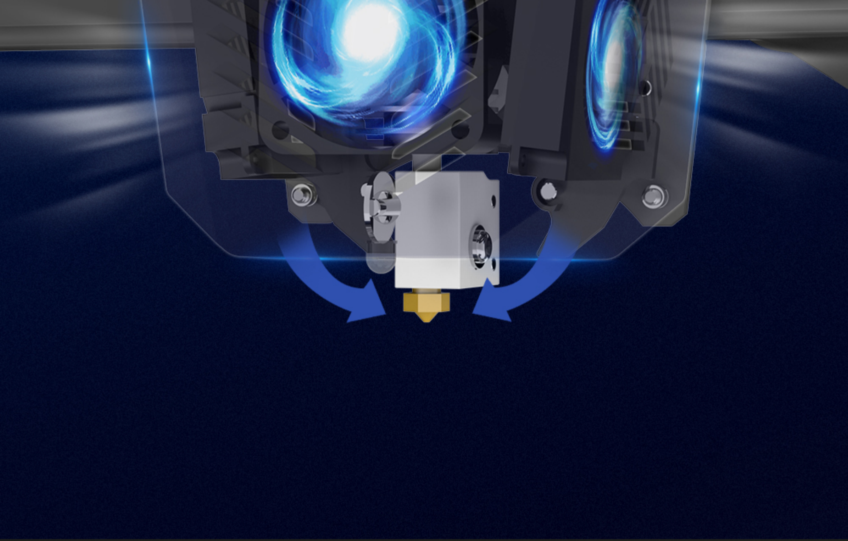

Double-gear Extrusion System

After targeted optimization of the extrusion force, the extrusion system is able to reduce the chances of filament tangle and is compatible with PLA and flexible filaments.

• • •

Strong Extrusion Force

Path Optimization

TPU Filaments

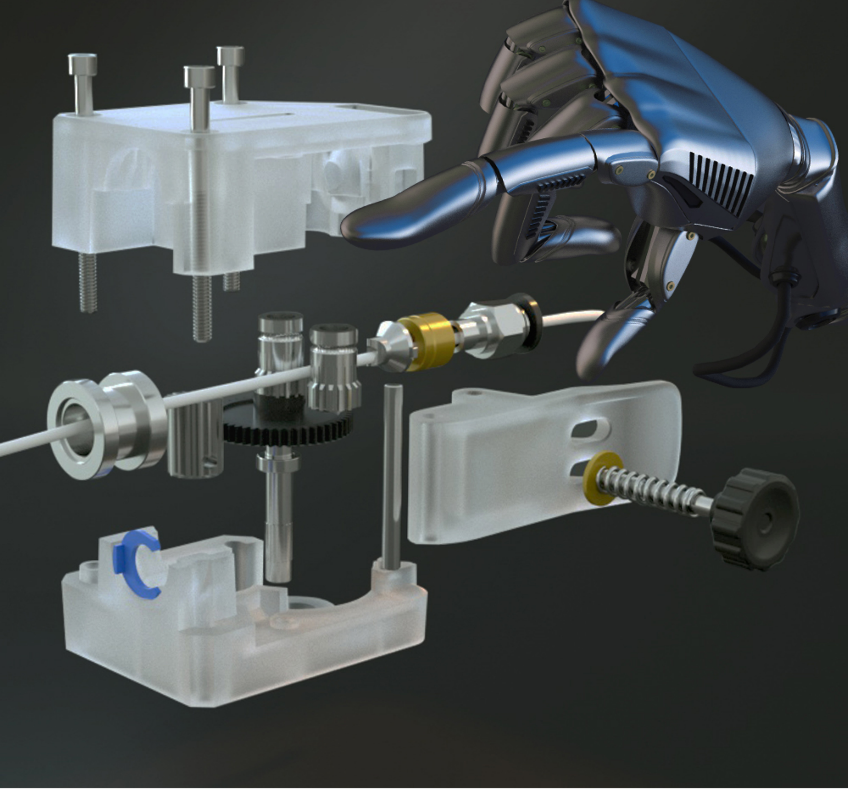

Small Body and Big Size

With 245 * 245 * 260mm print size,
the printer can meet your endless creative needs.

• • •

245*245*260mm

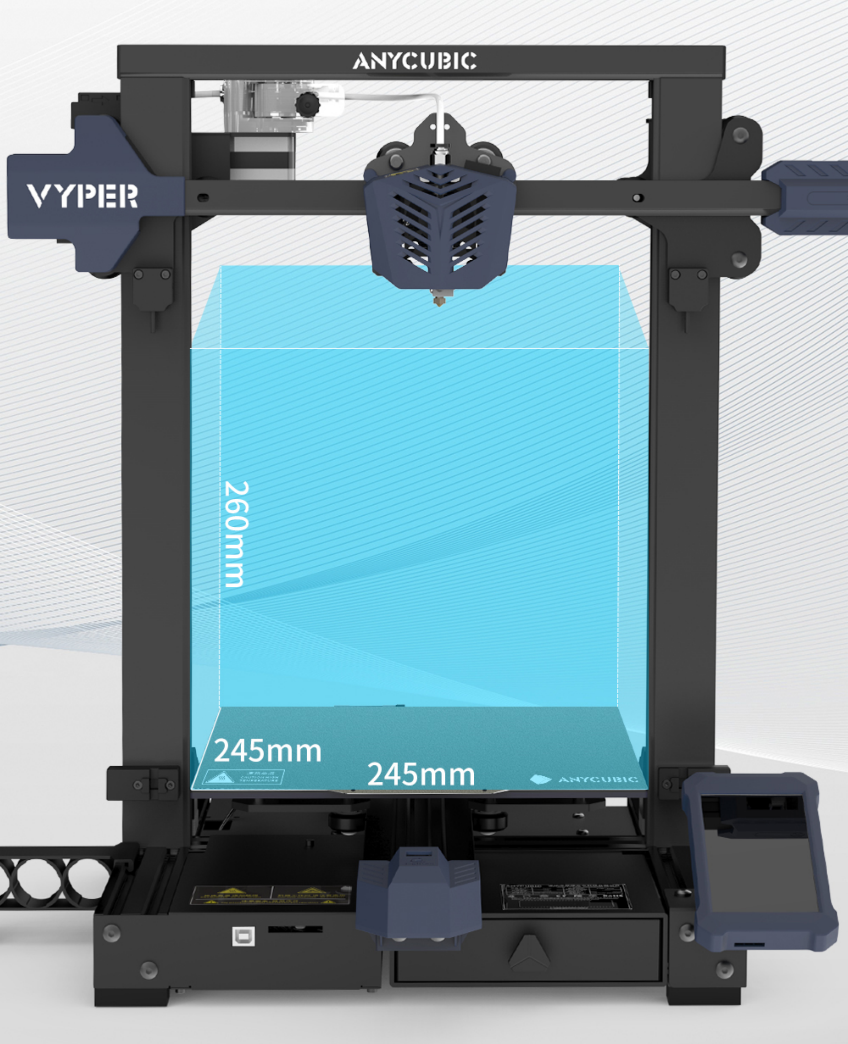

Fast Assembly

Its integrated structure and modular design allow you to assemble the machine just in 3 steps, simple and easy to maintain.

• • •

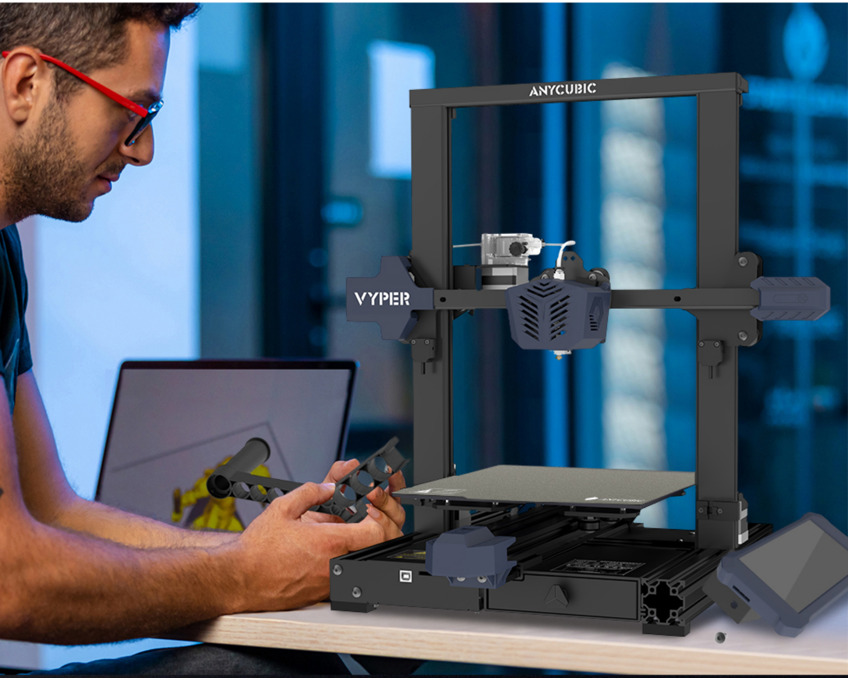

4.3 inch Large-size

Touch Screen

The screen features new UI interface, smooth and simple operation as well as English and Chinese switching.

• • •

New UI

Large-size Screen

Easy to Operate

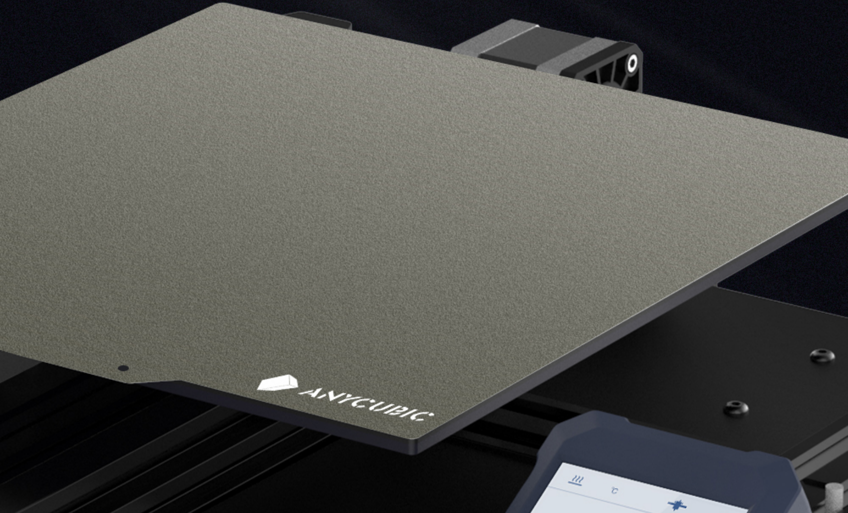

ANYCUBIC
Print
Prepare
System
RoHS

Double Protection, No Fear of Accidents

It supports power off resume print & material breakage detection to avoid time and resource waste.

• • •

Power Off Resume Print

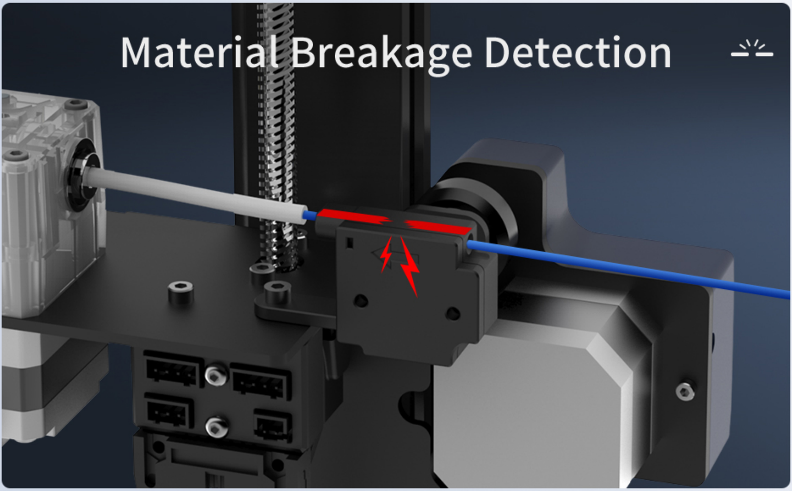

Material Breakage Detection

Every detail is just for your better using experience

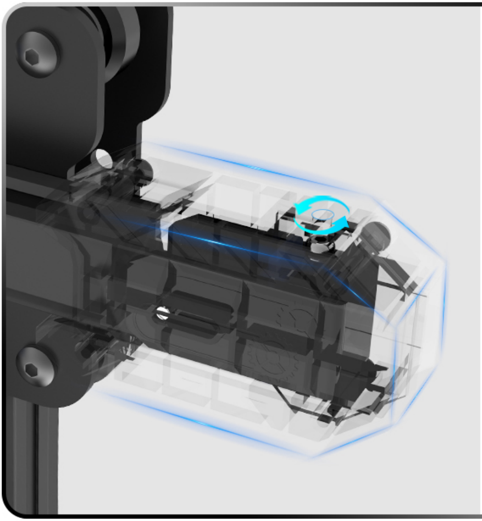

Belt Adjustment Module

The module can quickly adjust the tension of the X/Y axis belt, which brings you easier and more convenient operation.

Integrated Tool Box

The built-in design makes it easier for tool storage and usage.

Tighten
ANYCUBIC
RoHS
VP2113T0100095

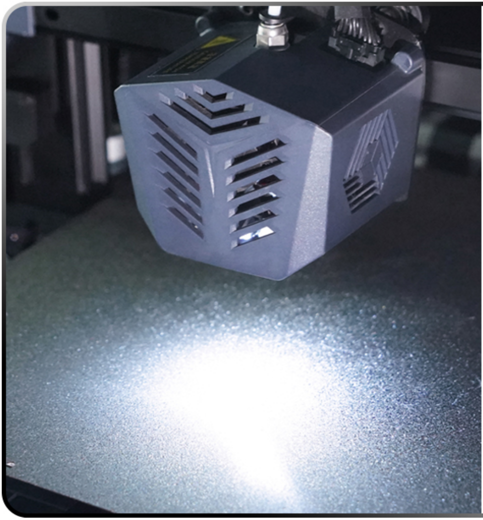

Printing Lighting System

The addition of printing lights enables you to check the printing status at any time.

Quick Disassembly Rack

The rack can be quickly assembled, disassembled and moved, which is convenient and practical.

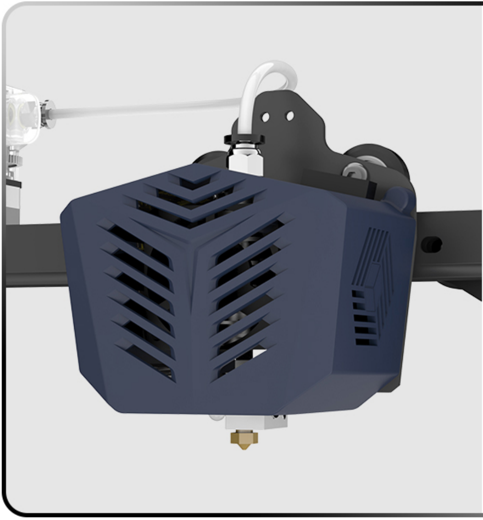

Modular Print Head

It is easy to maintain the print head kit and quick to replace the print head or fan, etc.

Machine Parameters

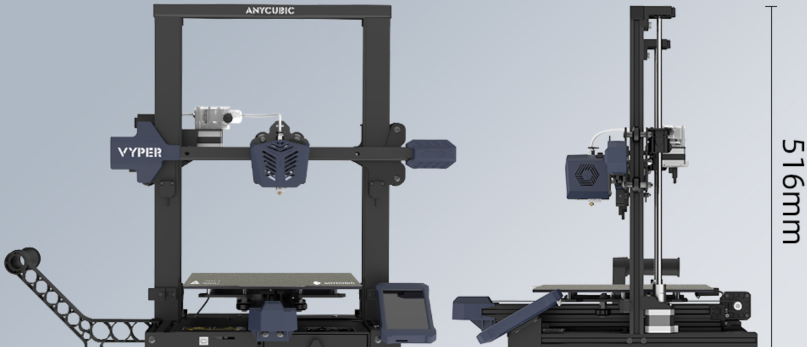

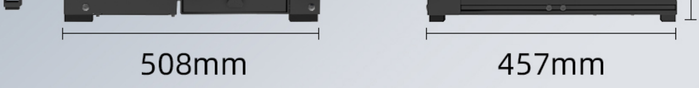

Print parameters

Printing Technology:

FDM (Fused Deposition Modeling)

Build Volume:

245mm(L)×245(W)×260mm(H)

Print Resolution:

±0.1 mm

Positioning Accuracy:

X/Y 0.0125mm，Z 0.002mm

Extruder Number:

Single

Nozzle Diameter:

0.4mm

Print Speed:

<180mm/s (recommended 80-100mm/s)

Support Filaments:

PLA, TPU, ABS, PETG, Wood

Physical parameters

Machine Size:

508mm×457mm×516mm

Machine Weight:

~10kg

Software parameters

Slicing Software:

Cura

Input Formats:

.STL, .OBJ, .AMF

Output Formats:

GCODE

Connection Mode:

Trans-flash Card; USB cable
(expert users only)

Power parameters

Input voltage:

100V/220V AC, 50/60Hz

Output voltage:

24V/14.6A（350W)

Temperature parameters

Ambient Operating Temperature:

8°C - 40°C

Operational Nozzle Temperature:

max ⩽260°C

Operational Hot Bed Temperature:

max ⩽110°C

Works Show

...

Print Size： 80mmx80mmx170mm
Print resolution： 0.1 mm
Print Speed： 90 mm/s

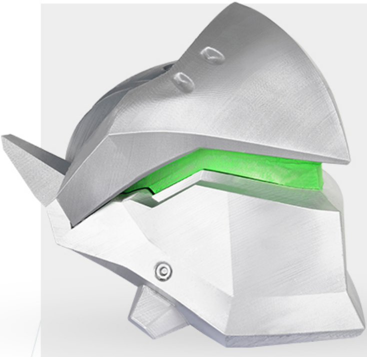

Print Size： 200mmx212mmx204mm
Print resolution： 0.1 mm
Print Speed： 100 mm/s

Print Size： 150mmx89mmx183mm

Print resolution： 0.1 mm

Print Speed： 95 mm/s

Parts List

Display Screen

Filament holder

Nozzle

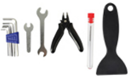

Tool kit

Filament

Memory Card

Assembly instrution

Card Reader

Power cord

Data cable

M5*45 4PCS

M5*14 3PCS

After Sale Service Card

After Sale Service Card